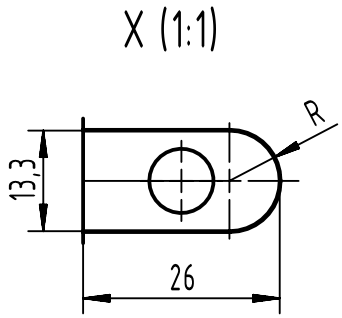

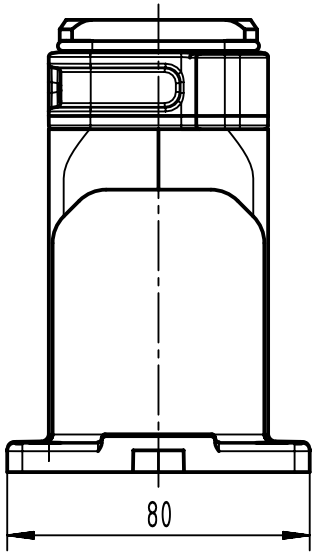

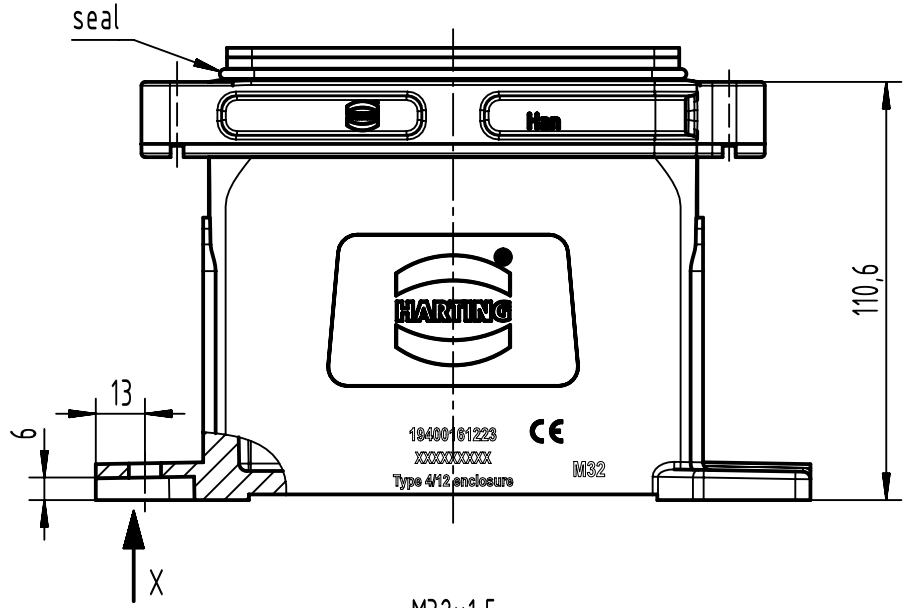

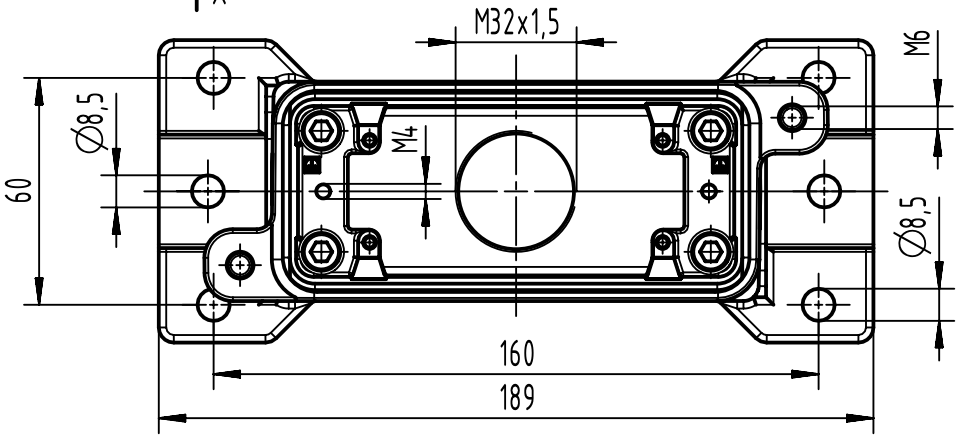

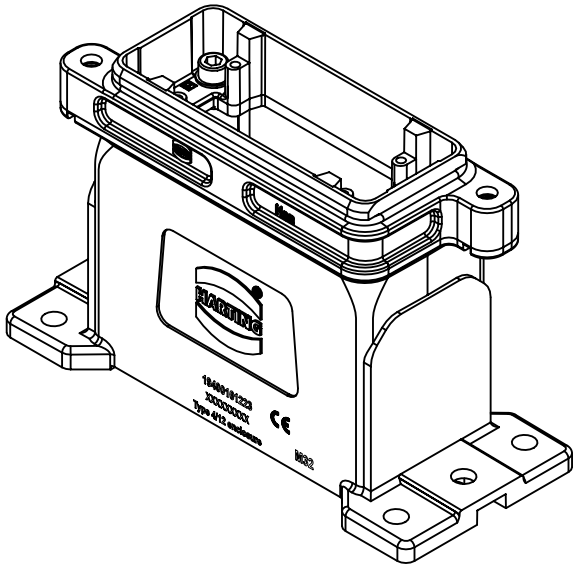

All Dimensions in mm Original Size DIN A4	Scale 1:2	Free size tol.		Ref. Sub.	
All rights reserved Department EL PD	Created by SPREENB	Inspected by SUNDERMEIER	Standardisation 302077	Date 2021-01-12	State Final Release
HARTING D-32339 Espelkamp	Title Han 16HPR-HSM-1xM32-Screw Lock				Doc-Key / ECM-Nr. 100808221/UGD/005/D 500000186068
	Type TB	Number 19 40 016 1223		Rev. D	Page 1/1

A4